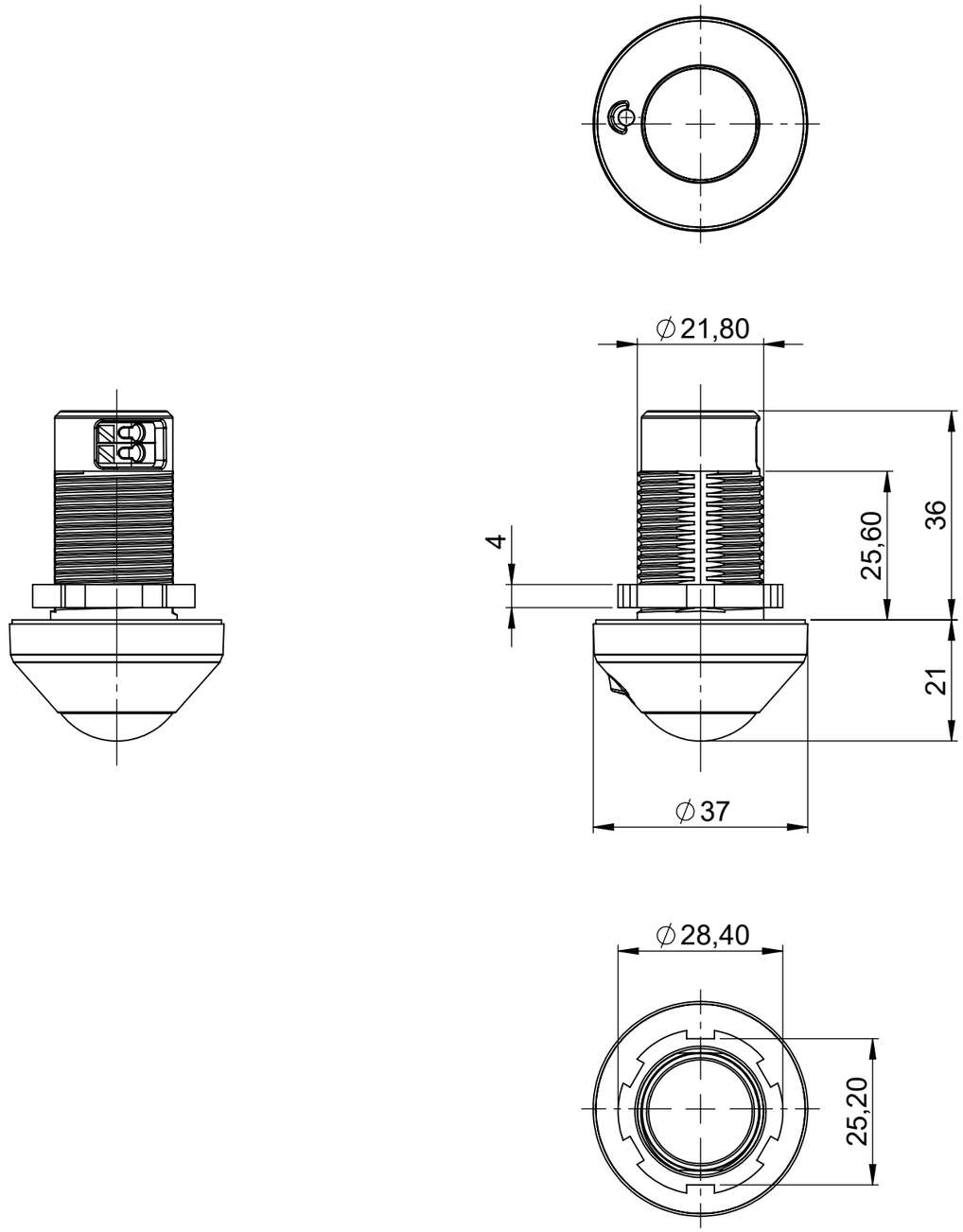

CREATED BY P.SACHSENWEG	CREATED AT 07.08.2025	SURFACE FINISH not applicable		GENERAL TOLERANCE **not applicable**	PROJECTION 1
CHANGED BY P.SACHSENWEG	CHANGED AT 07.08.2025	BASIC MATERIAL not applicable			
CHECKED BY	RELEASE DATE	CALC. WEIGHT / UNIT WEIGHT 27,29g	VOLUME / UNIT VOLUME 26542,63mm³	NOTES first edition	

CHANGE No.

DESCRIPTION
DALI-2 SENSOR LS PD HB LI

FORMAT
A3

inventronics

DOC TYPE	PLM DOC No.	LANGUAGE	VER	DOC TYPE	NEUTRAL FORMAT No.	VER	STATUS	SCALE
SWD	4549531	EN	00	**9C1**	**4549529**	00	RL	1:1

DOC TYPE	3D MODEL No.	DOC PART	VER	PLM MAT TYPE	PLM MATERIAL No.	PAGE
SWM	4549527	000	00	**DMAT**	**D30090551**	1/1

Released

SolidWorks